1.0 Scope

This document contains specific electrical, mechanical, and environmental requirements and specifications for THQA2 series tantalum case Hybrid® Capacitors.

2.0 Construction

2.1 General

The capacitor shall utilize sintered tantalum anodes and ruthenium oxide coated cathodes operating in aqueous electrolyte with additives. The components shall be hermetically sealed in a welded tantalum case with a glass-to-metal anode terminal seal.

2.2 Package

The configuration and dimensions shall be as per Figure 1.

2.3 Mass

8 ±1.5 grams.

2.4 Hermetic Seal

The capacitor shall be hermetically sealed such that the case does not leak electrolyte or vent any gas when exposed to a vacuum, per MIL-STD- 202, Method 112, Condition C, Procedure IIIa.

2.5 Part Markings

The capacitor shall be permanently and legibly labeled on the circumference of the case with the following information. The markings shall be resistant to solvents per MIL-STD-202, Method 215J.

i. Manufacturer's name and cage code
ii. Manufacturer's part identification number
iii. Capacitance
iv. Working voltage
v. Unique serial number
vi. Date/lot code
vii. Polarity

The capacitor will be laser engraved on the bottom (opposite leads) with the S/N and Date/Lot Code.

All markings shall be resistant to solvents per MIL-STD-202, Method 215J.

2.6 Solderability

The terminations shall be solderable per ANSI J-STD-002.

2.7 Resistance to Soldering Heat

The capacitor must withstand solder dipping of the terminals at 260°C for 10 seconds per MIL-STD-202, Method 210, Condition B. The capacitor must not be visibly damaged and the electrical characteristics must not be affected.

2.8 Terminal Strength

The capacitor terminals must withstand a 5-pound pull test for 30 seconds per Mil-Std-202, Method 211, Condition A. The capacitor must not be visibly damaged and the electrical characteristics must not be affected.

2.9 Fungus Resistance

The capacitor materials shall not support fungus growth and shall not be a nutrient to fungus.

3.0 Environmental Requirements

3.1 Operating Temperature

−55°C to +125°C.

3.2 Storage Temperature

-62°C to +130°C

3.3 Environmental Testing

The capacitor shall be designed to withstand environmental testing in accordance with Table 1. During testing the capacitor case shall be rigidly clamped to the test fixture with the leads upright. The capacitor must not be visibly damaged and the electrical characteristics must remain within specification.

Table 1. Environmental Testing

	TEST	TEST METHOD	CONDITION	REMARKS
1	SHOCK	MIL-STD-202 METHOD 213	G	11 mS, 50g
2	VIBRATION	MIL-STD-202 METHOD 204	D	12 Sweeps/Axis, 20g peak
3	VIBRATION	MIL-STD-202 METHOD 214	I, Letter D	1.5 Hours/Axis, 12g rms
4	MOISTURE RESIS.	MIL-STD-202 METHOD 106		6 V Polarity
5	THERMAL SHOCK	MIL-STD-202 METHOD 107	A	
6	ALTITUDE	MIL-STD-202 METHOD 105	D	100 000 ft test

4.0 Electrical Requirements

4.1 Capacitance

The capacitance is specified in Table 2 at 120 Hz and 25°C, ± 20%.

4.2 Working Voltage

The working voltage rating is from 0 to V as specified in Table 2.

4.3 Surge Voltage

The test shall be 1000 cycles at 110% of rated voltage at 85°C. Each cycle shall consist of a 30 second surge voltage application followed by a 330 second discharge period. The part shall be charged and discharged through a 1000 ohm resistor. The capacitor must not be visibly damaged and the electrical characteristics must remain within specification.

4.4 Equivalent Series Resistance

The maximum equivalent series resistance (ESR) is specified in Table 2 at 1 kHz and 25°C.

4.5 DC Leakage Current

The maximum DC leakage current is specified in Table 2 following 5 minutes at working voltage and 25°C.

4.6 Life

The operational life shall be greater than 2000 hours at 85°C and rated voltage or greater than 2000 hours at 125°C at the de-rated voltage specified in table 2.

Table 2 – Electrical Requirements

+85°C V (VDC)	Capacitance	Part Number	125°C V (VDC)	DCL	ESR (ohm)
10 V	10,000 µF	THQA2010103	6 V	<50µA	<0.20
16 V	5,000 µF	THQA2016502	9.5 V	<50µA	<0.20
25 V	3,800 µF	THQA2025382	15 V	<50µA	<0.20
30 V	3,000 µF	THQA2030302	18 V	<50µA	<0.25
35 V	2,500 µF	THQA2035252	21 V	<50µA	<0.25
50 V	1,500 µF	THQA2050152	30 V	<50µA	<0.25
60 V	875 µF	THQA2060871	36 V	<50µA	<0.35
75 V	565 µF	THQA2075561	45 V	<50µA	<0.50
100 V	360 µF	THQA2100361	60 V	<50µA	<0.80
125 V	215 µF	THQA2125211	75 V	<50µA	<1.25

DIMENSIONS IN INCHES

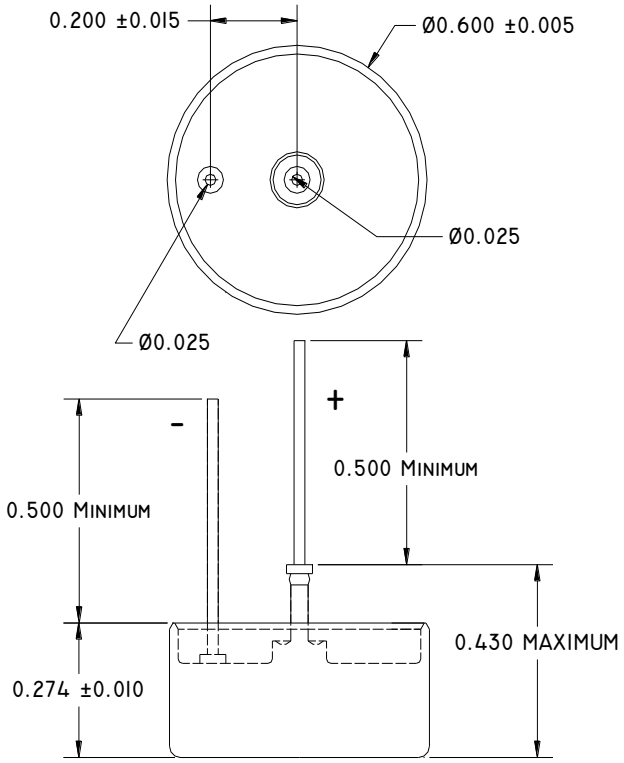

SPECIFICATIONS SUBJECT TO CHANGE